WARDROBE SmartPack

you've got it made...
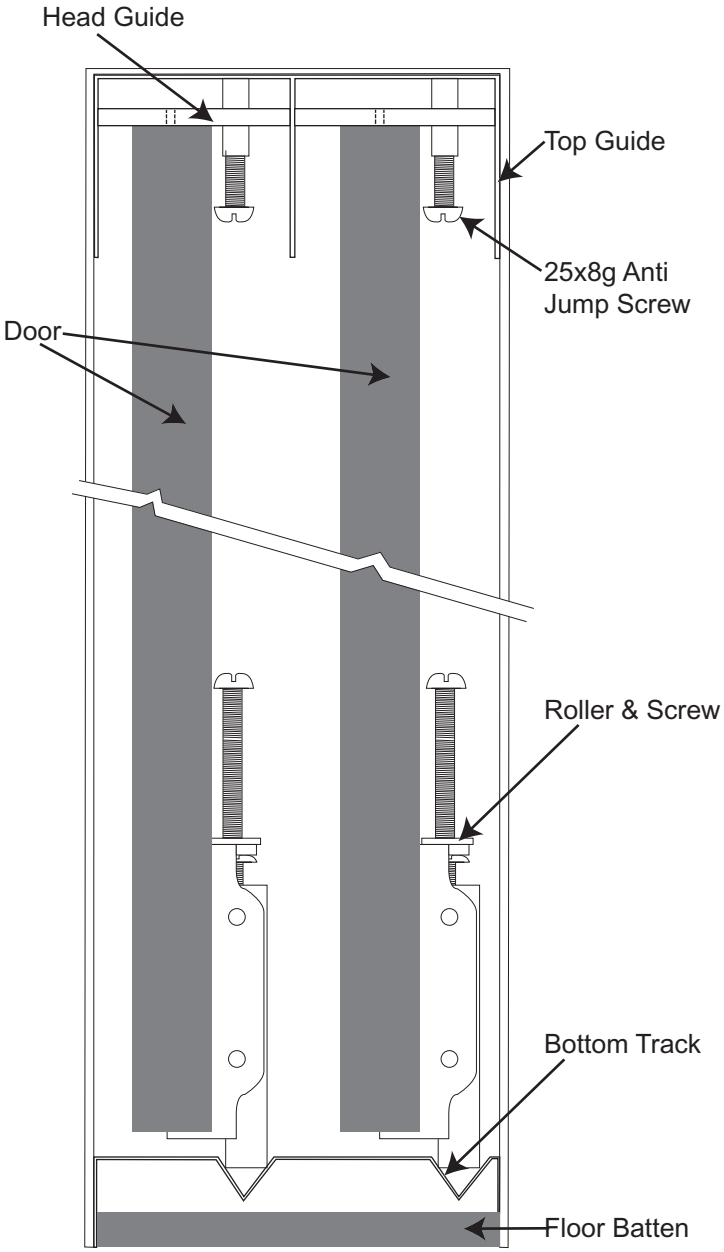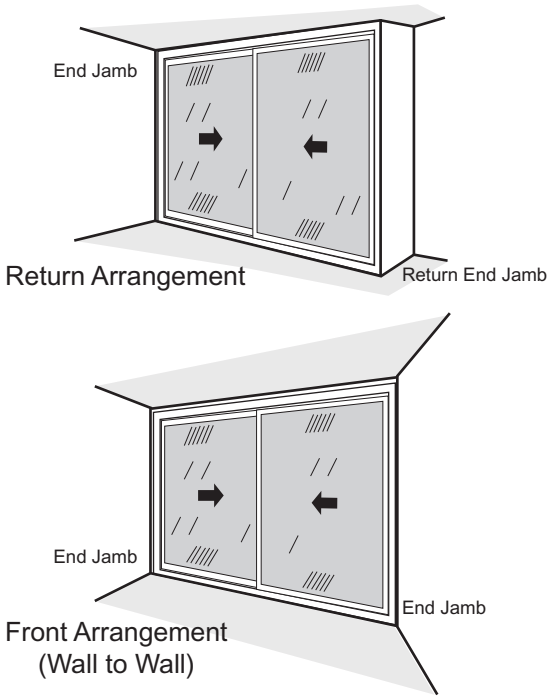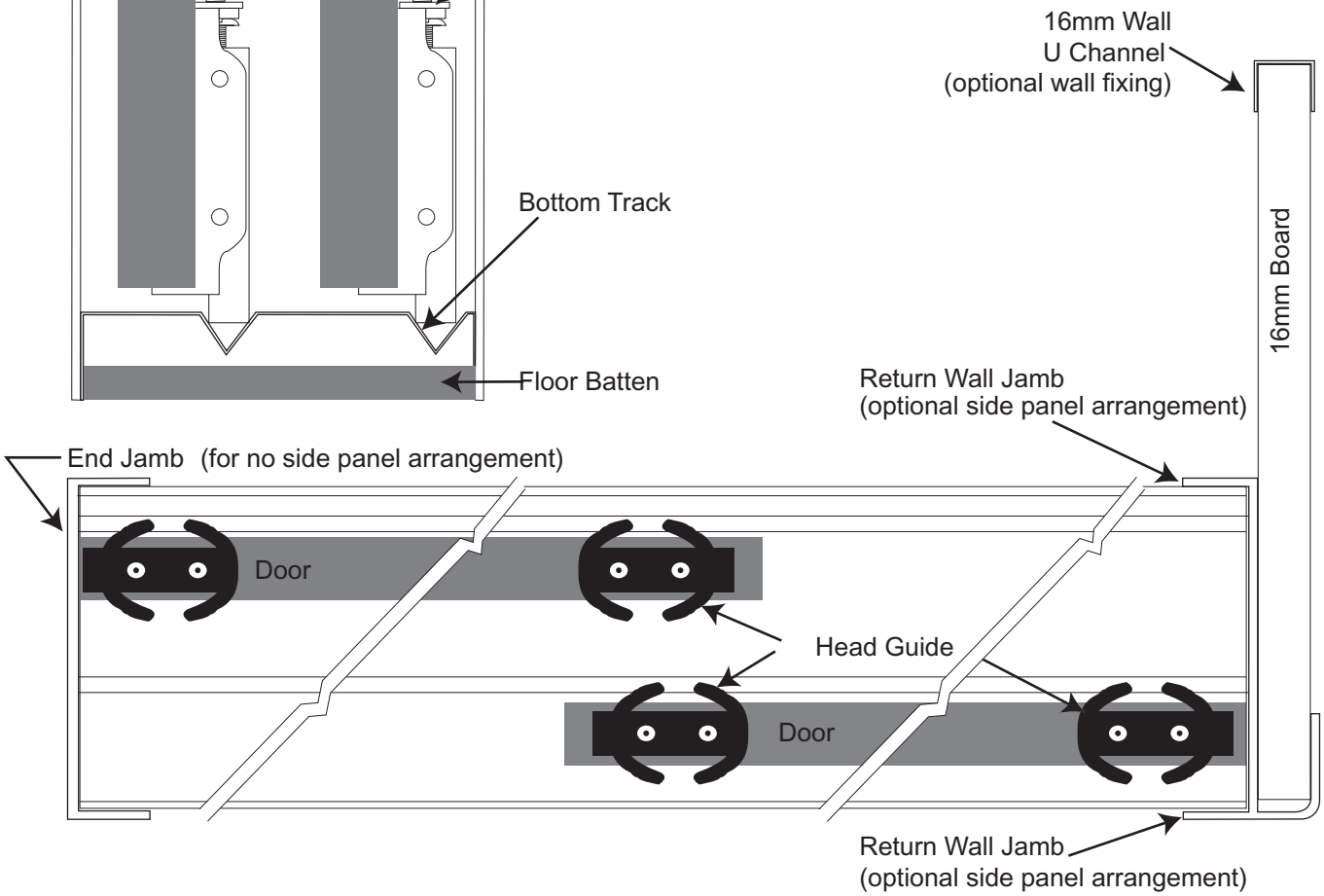
FRONT AND RETURN ARRANGEMENT